HSF RoHS

Specifications

备注(Remark)
1.材料(MATERIAL)
胶芯：PA6T/LCP+30%G.F UL94V-0，颜色: 黑色.
Housing: PA6T/LCP+30%G.F UL94V-0,Color: Black
四方针：黄铜
Contact: Brass
2.特性 (characteristics):
额定电流：1 AMP
Rating Current: 1 AMP.
接触阻抗：20 mΩ MAX.
Contact Resistance: 20 mΩ MAX.
绝缘阻抗：1000 MΩ min.
Insulating Resistance: 1000 MΩ min.
耐电压：AC 500V.
Withstanding Voltage: AC 500V.
温度范围：-40°C to+105°C
Temperature Range: -40°C to+105°C

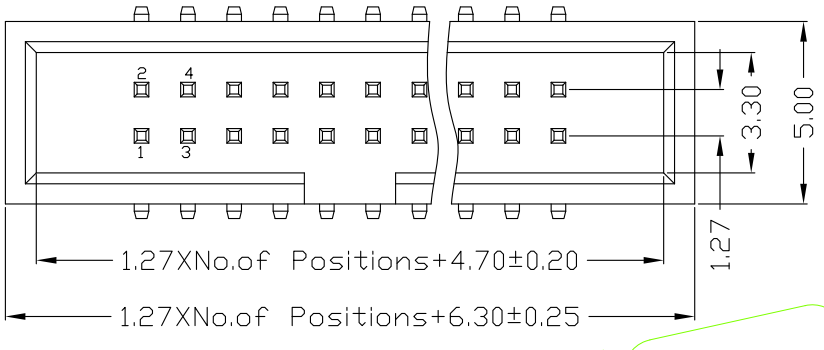

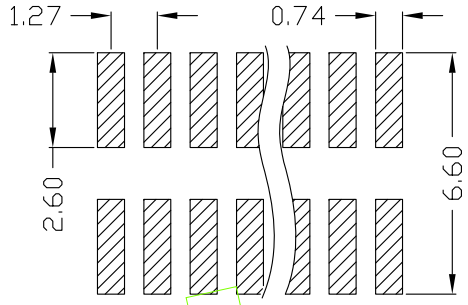

Recommended P.C.B layout

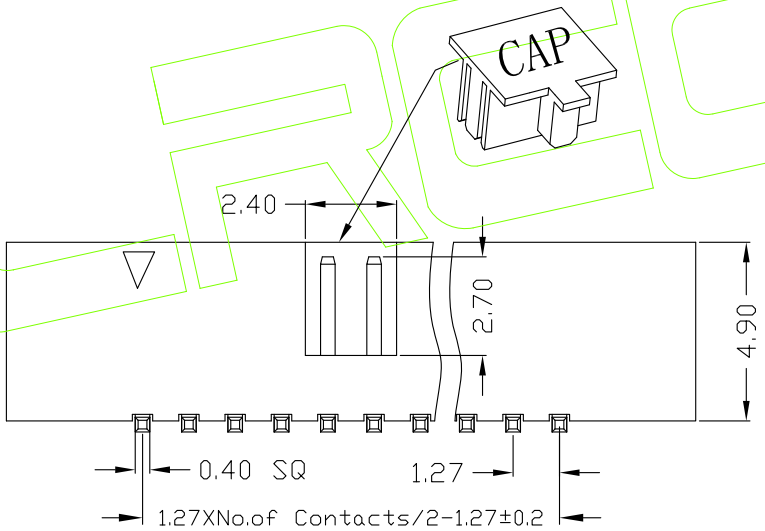

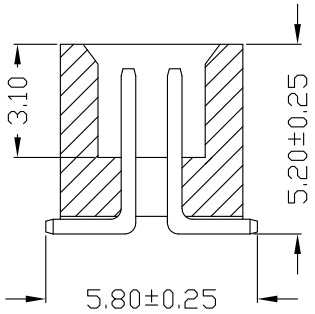

Ordering Information

1B49M- 1 XXX XX X X X 1 A1

No. of Pins	Contact Plating	Insulator Material	Color	Packing
6~68P	G0-Gold Flash	B:PA6T	B:Black	A:PE Bag
	G1=1u"Gold	C:PA9T		B:Tape & Reel+CAP
	G4=3u"Gold	D:LCP		C:Tube
	G5=5u"Gold			D:Tube+CAP
	G6=10u"Gold			E:Tray
	G7=15u"Gold			F:Tape & Reel
	G9=30u"Gold			
	F0-Gold Flash			
	F1=1U"Gold/Tin			
	F4=3U"Gold/Tin			
	F5=5U"Gold/Tin			
	F6=10U"Gold/Tin			
	F7=15U"Gold/Tin			
	F9=30U"Gold/Tin			
	SN=Tin			
	SM=Matte Tin			

REV	DATE	MODIFICATION DESCRIPTION	CHANGE	APPROVE
A1	20/06/09	Improve numbering instructions (完善编号标注说明)	A1	张涛
A0	12/05/18	NEW	———	———

OPERATION		DRAW	LIANR	20/06/09
X.X	±0.40	DESIGN	张涛	
X.XX	±0.25			
X.XXX	±0.15	CHECK	罗荣军	
Angle	±3°			
DIM	TOL	APPROVE	方里军	

SCALE		Fit
UNIT		MM
SIZE	A4	DESIGN
SHEET	1/1	CHECK
PROJ.		APPROVE

LRCON 连润电子有限公司
Lrcon Electronics Co.,Ltd

PART NO.	1B49M-1XXXXXXXX1
TITLE:	1.27简牛 塑高4.9 SMT
Customer No.	

LRCON