HSF RoHS

Specifications

备注(Remark)
1.材料(MATERIAL)
胶芯：PA6T/PBT+30%G.F UL94V-0，颜色: 黑色.
Housing: PA6T/PBT+30%G.F UL94V-0,Color: Black
四方针：黄铜
Contact : Brass
2.特性 (characteristics):
额定电流：3 AMP
Rating Current: 3 AMP.
接触阻抗：20 mΩ MAX.
Contact Resistance: 20 mΩ MAX.
绝缘阻抗：1000 MΩ min.
Insulating Resistance: 1000 MΩ min.
耐电压：AC 500V.
Withstanding Voltage: AC 500V.
温度范围：-40°C to+105°C
Temperature Range: -40°C to+105°C

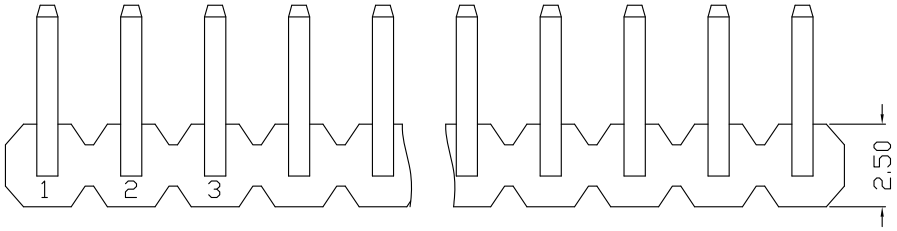

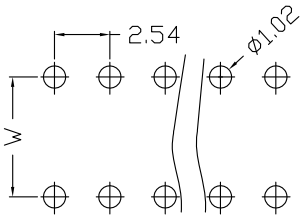

Recommended P.C.B layout

LRCON

Ordering Information

3P25C- 11 XX XX X XXX X 1 A1

No. of Pins Per Row	Contact Plating	Insulator Material	Length OF Terminal	Packing
1~40P	G0=Gold Flash G1=1u"Gold G4=3u"Gold G5=5u"Gold G6=10u"Gold G7=15u"Gold G9=30u"Gold F0=Gold Flash F1=1U"Gold/Tin F4=3U"Gold/Tin F5=5U"Gold/Tin F6=10U"Gold/Tin F7=15U"Gold/Tin F9=30U"Gold/Tin SN=Tin SM=Matte Tin	A:PBT B:PA6T C:PA9T D:LCP		A:PE Bag B:Tape & Reel+CAP C:Tube D:Tube+CAP E:Tray F:Tape & Reel

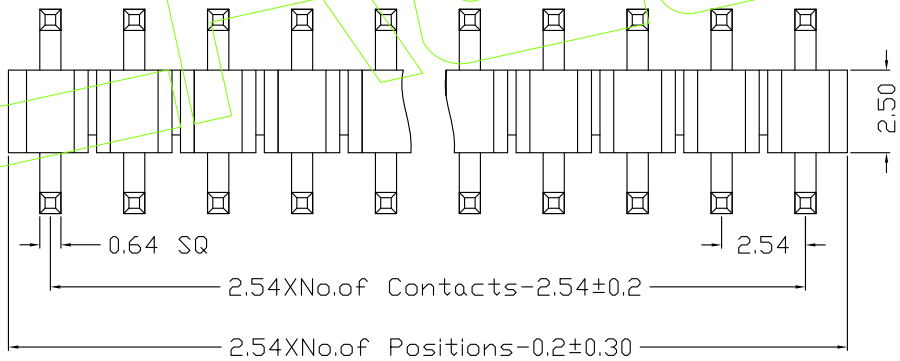

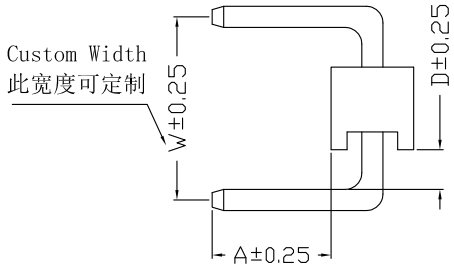

Dimension antitheses list			
ITEM	A	D	W
Standard	3.0	1.2	5.5
Alternate			

REV	DATE	MODIFICATION DESCRIPTION	CHANGE	APPROVE
A1	20/06/09	Improve numbering instructions (完善编号标注说明)	A1	张涛
A0	12/05/18	NEW	———	———

OPERATION				
X.X	±0.40	DRAW	LIANR	20/06/09
X.XX	±0.25	DESIGN	张涛	
X.XXX	±0.15	CHECK	罗荣军	
Angle	±3°	APPROVE	方里军	
DIM	TOL			

SCALE		Fit
UNIT		MM
SIZE	A4	DESIGN
SHEET	1/1	CHECK
PROJ.		APPROVE

LRCON 连润电子有限公司
Lrcon Electronics Co.,Ltd

PART NO.	3P25C-11XXXXXXXXX1
TITLE:	2.54单排针 塑高2.5 桥型
Customer No.	